Design New Artificial Intelligence Base Modified PID Hybrid Controller for Highly Nonlinear System

Mahmoud Moosavi[1, 2], Mehdi Eram[2], Arzhang Khajeh[2],
Omid Mahmoudi[2] and Farzin Piltan[2]

[1]*Department of Control and Automation, Shiraz University, Shiraz/ Iran*
[2]*Department of Research and Development, Iranian Research and Development Company, SSP.Co, Shiraz, Iran, WWW.Iranssp.com*
ssp.robotic@gmail.com

Abstract

Design a nonlinear controller for second order nonlinear uncertain dynamical systems is one of the most important challenging works. This research focuses on the design, implementation and analysis of a new modified proportional-integral-derivative (PID) hybrid fuzzy controller for highly nonlinear dynamic continuum robot manipulator, in presence of uncertainties. In order to provide high performance nonlinear methodology, modified PID controller in presence of boundary derivative part, computed torque controller (CTC) and fuzzy inference system are selected. Linear PID controller can be used to control of partly known nonlinear dynamic parameters of robot manipulator. Pure CTC is used to estimate highly nonlinear parameters, this controller has an important drawback; nonlinear equivalent dynamic formulation in uncertain dynamic parameter. In order to solve the uncertain nonlinear dynamic parameters, implement easily and avoid mathematical model base controller, Mamdani's performance/error-based fuzzy logic methodology with one input and one output and 7 rules is applied to proposed methodology. The results demonstrate that the proposed method is a partly model-free controller which works well in certain and partly uncertain system.

Keywords*: continuum robot manipulator, modified PID controller, computed torque controller, fuzzy inference system*

1. Introduction and Background

Robot manipulators have many applications in aerospace, manufacturing, automotive, medicine and other industries. Robot manipulators consist of three main parts: mechanical, electrical, and control. In the mechanical point of view, robot manipulators are collection of serial or parallel links which have connected by revolute and/or prismatic joints between base and end-effector frame. The robot manipulators electrical parts are used to run the controllers, actuators for links motion and sensors, which including the following subparts: power supply to supply the electrical and control parts, power amplifier to amplify the signal and driving the actuators, DC/stepper/servo motors or hydraulic/pneumatic cylinders to move the links, and transmission part to transfer data between robot manipulator subparts [1-14]. Based on mechanical and control methodologies research in robotic system, mechanical design, type of actuators and type of systems drive play important roles to have the best performance controller. A serial link robot is a sequence of joints and links which begins with a base frame and ends with an end-effector. This type of robot manipulators, comparing with the load capacity is more weightily because each link must be supported the weights of all next links

and actuators between the present link and end-effector [15-19]. Serial robot manipulators have been used in automotive industry, medical application, and also in research laboratories [20]. Continuum robots represent a class of robots that have a biologically inspired form characterized by flexible backbones and high degrees-of-freedom structures [1-20].

Controller is a device which can sense information from linear or nonlinear system (*e.g.*, flexible robot) to improve the systems performance [7-20]. The main targets in design control systems are stability, good disturbance rejection, and small tracking error[7, 21-30]. Several robot are controlled by linear methodologies (*e.g.*, Proportional-Derivative (PD) controller, Proportional- Integral (PI) controller or Proportional- Integral-Derivative (PID) controller), but when robot works with various payloads and have uncertainty in dynamic models this technique has limitations. In some applications continuum robot are used in an unknown and unstructured environment, therefore strong mathematical tools used in new control methodologies to design nonlinear robust controller with an acceptable performance (*e.g.*, minimum error, good trajectory, disturbance rejection) [31-45]. Computed torque controller (CTC) is a powerful nonlinear controller which it widely used in control of continuum robot manipulator. It is based on feedback linearization and computes the required arm torques by the nonlinear feedback control law. This controller works very well when all dynamic and physical parameters are known but when the system has variation in dynamic parameters, the controller has no acceptable performance[14-28]. In practice, most of physical systems (*e.g.*, continuum robot manipulators) parameters are unknown or time variant, therefore, computed torque like controller used to compensate dynamic equation of robot manipulator[46-57]. When all dynamic and physical parameters are known, computed torque controller works fantastically; practically a large amount of systems have uncertainties, therefore fuzzy inference methodology is one of the best case to solve this challenge. In recent years, artificial intelligence theory has been used in nonlinear controllers. Neural network, fuzzy logic and neuro-fuzzy are synergically combined with nonlinear classical controller and used in nonlinear, time variant and uncertain plant (*e.g.*, continuum robot manipulator). Fuzzy logic controller (FLC) is one of the most important applications of fuzzy logic theory. This controller can be used to control nonlinear, uncertain, and noisy systems. This method is free of some model techniques as in model-based controllers. As mentioned that fuzzy logic application is not only limited to the modelling of nonlinear systems [31-36] but also this method can help engineers to design a model-free controller.

Control robot arm manipulators using model-based controllers are based on manipulator dynamic model. These controllers often have many problems for modelling. Conventional controllers require accurate information of dynamic model of continuum robot manipulator, but most of time these models are MIMO, nonlinear and partly uncertain therefore calculate accurate dynamic model is complicated [20-32]. The main reasons to use fuzzy logic methodology are able to give approximate recommended solution for uncertain and also certain complicated systems to easy understanding and flexible. Fuzzy logic provides a method to design a model-free controller for nonlinear plant with a set of IF-THEN rules [28-32].

This research focuses on the design P+I+D-based fuzzy hybrid controller is a dynamic partly model-free controller. This methodology is based on design modified PID controller with boundary derivative method and applied fuzzy logic in equivalent nonlinear dynamic part to estimate unknown parameters. This paper is organized as follows: Detail of PID controller, classical computed torque controller, fuzzy inference engine and dynamic formulation of flexible continuum robot manipulator are presented in Section 2, theory. In Section 3, methodology, the main subject of design fuzzy modified PID hybrid theory is

presented. In Section 4, the simulation result is presented and finally in Section 5, the conclusion is presented.

2. Theory

Dynamic Modeling of Continuum Robot: The Continuum section analytical model developed here consists of three modules stacked together in series. In general, the model will be a more precise replication of the behavior of a continuum arm with a greater of modules included in series. However, we will show that three modules effectively represent the dynamic behavior of the hardware, so more complex models are not motivated. Thus, the constant curvature bend exhibited by the section is incorporated inherently within the model. The model resulting from the application of Lagrange's equations of motion obtained for this system can be represented in the form

$$\boldsymbol{F_{coeff}\,\underline{\tau} = D\left(\underline{q}\right)\underline{\ddot{q}} + C\left(\underline{q}\right)\underline{\dot{q}} + G\left(\underline{q}\right)} \tag{1}$$

where τ is a vector of input forces and q is a vector of generalized co-ordinates. The force coefficient matrix F_{coeff} transforms the input forces to the generalized forces and torques in the system. The inertia matrix, D is composed of four block matrices. The block matrices that correspond to pure linear accelerations and pure angular accelerations in the system (on the top left and on the bottom right) are symmetric. The matrix C contains coefficients of the first order derivatives of the generalized co-ordinates. Since the system is nonlinear, many elements of C contain first order derivatives of the generalized co-ordinates. The remaining terms in the dynamic equations resulting from gravitational potential energies and spring energies are collected in the matrix G. The coefficient matrices of the dynamic equations are given below,

$$\boldsymbol{Fcoeff} = \tag{2}$$

$$\begin{bmatrix} 1 & 1 & cos(\theta_1) & cos(\theta_1) & cos(\theta_1+\theta_2) & cos(\theta_1+\theta_2) \\ 0 & 0 & 1 & 1 & cos(\theta_2) & cos(\theta_2) \\ 0 & 0 & 0 & 0 & 1 & 1 \\ 1/2 & -1/2 & 1/2 & -1/2 & 1/2+s_2sin(\theta_2) & -1/2+s_2sin(\theta_2) \\ 0 & 0 & 1/2 & -1/2 & 1/2 & -1/2 \\ 0 & 0 & 0 & 0 & 1/2 & -1/2 \end{bmatrix}$$

$$\boldsymbol{D\left(\underline{q}\right)} = \tag{3}$$

$$\begin{bmatrix} \boldsymbol{m_1+m_2+m_3} & \boldsymbol{m_2cos(\theta_1)+m_3cos(\theta_1)} & \boldsymbol{m_3cos(\theta_1+\theta_2)} & \boldsymbol{-m_2s_2sin(\theta_1)-m_3s_2sin(\theta_1)-m_3s_3sin(\theta_1+\theta_2)} & \boldsymbol{-m_3s_3sin(\theta_1+\theta_2)} & \boldsymbol{0} \\ \boldsymbol{m_2cos(\theta_1)+m_3cos(\theta_1)} & \boldsymbol{m_2+m_3} & \boldsymbol{m_3cos(\theta_2)} & \boldsymbol{-m_3s_3sin(\theta_2)} & \boldsymbol{-m_3s_3sin(\theta_2)} & \boldsymbol{0} \\ \boldsymbol{m_3cos(\theta_1+\theta_2)} & \boldsymbol{m_3cos(\theta_2)} & \boldsymbol{m_3} & \boldsymbol{m_3s_3sin(\theta_2)} & \boldsymbol{0} & \boldsymbol{0} \\ \boldsymbol{-m_2s_2sin(\theta_1)-m_3s_2sin(\theta_1)-m_3s_3sin(\theta_1+\theta_2)} & \boldsymbol{-m_3s_3sin(\theta_2)} & \boldsymbol{m_3s_2sin(\theta_2)} & \boldsymbol{m_2s_2^2+I_1+I_2+I_3+m_3s_2^2+m_3s_3^2+2m_3s_3cos(\theta_2)s_2} & \boldsymbol{I_2+m_3s_3^2+I_3+m_3s_3cos(\theta_2)s_2} & \boldsymbol{I_3} \\ \boldsymbol{-m_3s_3sin(\theta_1+\theta_2)} & \boldsymbol{-m_3s_3sin(\theta_2)} & \boldsymbol{0} & \boldsymbol{I_2+m_3s_3^2+I_3+m_3s_3cos(\theta_2)s_2I} & \boldsymbol{I_2+m_3s_3^2+I_3} & \boldsymbol{I_3} \\ \boldsymbol{0} & \boldsymbol{0} & \boldsymbol{0} & \boldsymbol{I_3} & \boldsymbol{I_3} & \boldsymbol{I_3} \end{bmatrix}$$

$$\boldsymbol{C}\left(\underline{\boldsymbol{q}}\right) = \tag{4}$$

$$\begin{bmatrix}
c_{11}+c_{21} & \begin{matrix}-2m_2 sin(\theta_1)\dot{\theta}_1\\ -2m_3 sin(\theta_1)\dot{\theta}_1\end{matrix} & \begin{matrix}-2m_3 sin(\theta_1+\theta_2)\\ (\dot{\theta}_1+\dot{\theta}_2)\end{matrix} & \begin{matrix}-m_2 s_2\\ cos(\theta_1)(\dot{\theta}_1)\\ +(1/2)(c_{11}+c_{21})\\ -m_3 s_2\\ cos(\theta_1)(\dot{\theta}_1)\\ -m_3 s_3\\ cos(\theta_1+\theta_2)(\dot{\theta}_1)\end{matrix} & -m_3 s_3 sin(\theta_1+\theta_2) & 0 \\
0 & c_{12}+c_{22} & \begin{matrix}-2m_3 sin(\theta_2)\\ (\dot{\theta}_1+\dot{\theta}_2)\end{matrix} & \begin{matrix}-m_3 s_3(\dot{\theta}_1)\\ +(1/2)\\ (c_{12}+c_{22})\\ -m_3 s_2(\dot{\theta}_1)\\ -m_3 s_3\\ cos(\theta_2)(\dot{\theta}_1)\end{matrix} & \begin{matrix}-2m_3 s_3\\ cos(\theta_2)(\dot{\theta}_1)\\ -m_3 s_3\\ cos(\theta_2)(\dot{\theta}_2)\end{matrix} & 0 \\
0 & 2m_3 sin(\theta_2)(\dot{\theta}_1) & c_{13}+c_{23} & \begin{matrix}-m_3 s_3 s_2\\ cos(\theta_2)(\dot{\theta}_1)\\ -m_3 s_3(\dot{\theta}_1)\end{matrix} & \begin{matrix}-2m_3 s_3(\dot{\theta}_1)\\ -m_3 s_3(\dot{\theta}_2)\end{matrix} & \begin{matrix}(1/2)\\ (c_{13}+c_{23}\end{matrix} \\
\begin{matrix}(1/2)\\ (c_{11}+c_{21})\end{matrix} & \begin{matrix}2m_3 s_3 cos(\theta_2)(\dot{\theta}_1)\\ -2m_3 s_2(\dot{\theta}_1)\\ +2m_2 s_2(\dot{\theta}_1)\end{matrix} & \begin{matrix}2m_3 s_3(\dot{\theta}_1+\dot{\theta}_2)\\ -2m_3 s_2 cos(\theta_2)\\ (\dot{\theta}_1+\dot{\theta}_2)\end{matrix} & \begin{matrix}2m_3 s_3 s_2\\ sin(\theta_2)(\dot{\theta}_2)\\ +(1^2/4)\\ (c_{11}+c_{21})\end{matrix} & \begin{matrix}m_3 s_3 s_2\\ sin(\theta_2)(\dot{\theta}_2)\end{matrix} & 0 \\
0 & \begin{matrix}(1/2)(c_{12}+c_{22})+\\ 2m_3 s_3 cos(\theta_2)(\dot{\theta}_1)\end{matrix} & \begin{matrix}2m_3 s_3\\ (\dot{\theta}_1+\dot{\theta}_2)\end{matrix} & \begin{matrix}m_3 s_3 s_2\\ sin(\theta_2)(\dot{\theta}_1)\end{matrix} & \begin{matrix}(1^2/4)\\ (c_{12}+c_{22})\end{matrix} & 0 \\
0 & 0 & (1/2)(c_{13}-c_{23}) & 0 & 0 & \begin{matrix}(1^2/4)\\ (c_{13}+c_{23}\end{matrix}
\end{bmatrix}$$

$$\boldsymbol{G}\left(\underline{\boldsymbol{q}}\right) = \tag{5}$$

$$\begin{bmatrix}
-m_1 g - m_2 g + k_{11}(s_1+(1/2)\theta_1 - s_{01}) + k_{21}(s_1-(1/2)\theta_1 - s_{01}) - m_3 g \\
-m_2 g cos(\theta_1) + k_{12}(s_2+(1/2)\theta_2 - s_{02}) + k_{22}(s_2-(1/2)\theta_2 - s_{02}) - m_3 g cos(\theta_1) \\
-m_3 g cos(\theta_1+\theta_2) + k_{13}(s_3+(1/2)\theta_3 - s_{03}) + k_{23}(s_3-(1/2)\theta_3 - s_{03}) \\
\begin{matrix} m_2 s_2 g sin(\theta_1) + m_3 s_3 g sin(\theta_1+\theta_2) + m_3 s_2 g sin(\theta_1) + k_{11}(s_1+(1/2)\theta_1 - s_{01})(1/2) \\ +k_{21}(s_1-(1/2)\theta_1 - s_{01})(-1/2) \end{matrix} \\
m_3 s_3 g sin(\theta_1+\theta_2) + k_{12}(s_2+(1/2)\theta_2 - s_{02})(1/2) + k_{22}(s_2-(1/2)\theta_2 - s_{02})(-1/2) \\
k_{13}(s_3+(1/2)\theta_3 - s_{03})(1/2) + k_{23}(s_3-(1/2)\theta_3 - s_{03})(-1/2)
\end{bmatrix}$$

Design PID Controller: Design of a linear methodology to control of flexible robot manipulator was very straight forward. Since there was an output from the torque model, this means that there would be two inputs into the PID controller. Similarly, the outputs of the controller result from the two control inputs of the torque signal. In a typical PID method, the controller corrects the error between the desired input value and the measured value. Since the actual position is the measured signal. Figure 1 is shown linear PID methodology, applied to flexible robot manipulator [56-57].

$$\boldsymbol{e(t) = \theta_a(t) - \theta_d(t)} \tag{6}$$

$$U_{PID} = K_{p_a} e + K_{V_a} \dot{e} + K_I \sum e \tag{7}$$

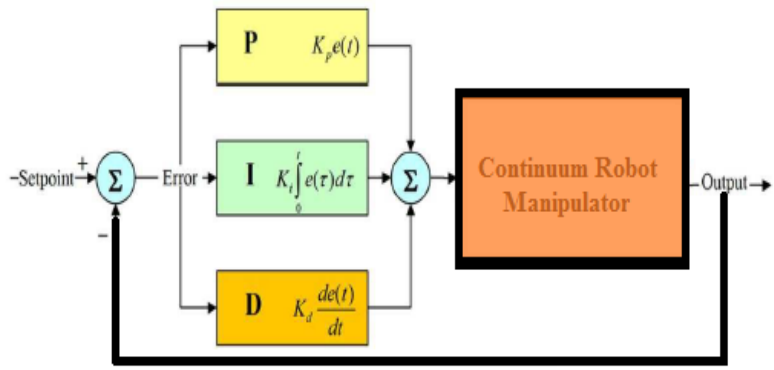

Figure 1. Block Diagram of Linear PID method

The model-free control strategy is based on the assumption that the joints of the manipulators are all independent and the system can be decoupled into a group of single-axis control systems [18-23]. Therefore, the kinematic control method always results in a group of individual controllers, each for an active joint of the manipulator. With the independent joint assumption, no a priori knowledge of robot manipulator dynamics is needed in the kinematic controller design, so the complex computation of its dynamics can be avoided and the controller design can be greatly simplified. This is suitable for real-time control applications when powerful processors, which can execute complex algorithms rapidly, are not accessible. However, since joints coupling is neglected, control performance degrades as operating speed increases and a manipulator controlled in this way is only appropriate for relatively slow motion [44-46]. The fast motion requirement results in even higher dynamic coupling between the various robot joints, which cannot be compensated for by a standard robot controller such as PID [50], and hence model-based control becomes the alternative.

Computed Torque Controller: The central idea of Computed torque controller (CTC) is feedback linearization method therefore, originally this algorithm is called feedback linearization controller. It has assumed that the desired motion trajectory for the manipulator $\boldsymbol{q_d(t)}$, as determined, by a path planner. Defines the tracking error as [45-57]:

$$\boldsymbol{e(t) = q_d(t) - q_a(t)} \tag{8}$$

Where e(t) is error of the plant, $\boldsymbol{q_d(t)}$ is desired input variable, that in our system is desired displacement, $\boldsymbol{q_a(t)}$ is actual displacement. If an alternative linear state-space equation in the form $\boldsymbol{\dot{x} = Ax + BU}$ can be defined as

$$\dot{\boldsymbol{x}} = \begin{bmatrix} \boldsymbol{0} & \boldsymbol{I} \\ \boldsymbol{0} & \boldsymbol{0} \end{bmatrix} \boldsymbol{x} + \begin{bmatrix} \boldsymbol{0} \\ \boldsymbol{I} \end{bmatrix} \boldsymbol{U} \tag{9}$$

With $\boldsymbol{U = -D^{-1}(q).N(q,\dot{q}) + D^{-1}(q).\tau}$ and this is known as the Brunousky canonical form. By equation (8) and (9) the Brunousky canonical form can be written in terms of the state $\boldsymbol{x = [e^T\ \dot{e}^T]^T}$ as [11-34]:

$$\frac{d}{dt}\begin{bmatrix} e \\ \dot{e} \end{bmatrix} = \begin{bmatrix} 0 & I \\ 0 & 0 \end{bmatrix} . \begin{bmatrix} e \\ \dot{e} \end{bmatrix} + \begin{bmatrix} 0 \\ I \end{bmatrix} U \tag{10}$$

With

$$U = \ddot{q}_d + D^{-1}(q).\{N(q.\dot{q}) - \tau\} \tag{11}$$

Then compute the required arm torques using inverse of equation (11), is;

$$\tau = D(q)(\ddot{q}_d - U) + N(\dot{q}, q) \tag{12}$$

This is a nonlinear feedback control law that guarantees tracking of desired trajectory. Selecting proportional-plus-derivative (PD) feedback for U(t) results in the PD-computed torque controller [8-10];

$$\tau = D(q)\left(\ddot{q}_d + K_v\dot{e} + K_p e\right) + N(q, \dot{q}) \tag{13}$$

and the resulting linear error dynamics are

$$\left(\ddot{q}_d + K_v\dot{e} + K_p e\right) = 0 \tag{14}$$

According to the linear system theory, convergence of the tracking error to zero is guaranteed [6-26]. Where K_p and K_v are the controller gains. The result schemes is shown in Figure 2, in which two feedback loops, namely, inner loop and outer loop, which an inner loop is a compensate loop and an outer loop is a tracking error loop.

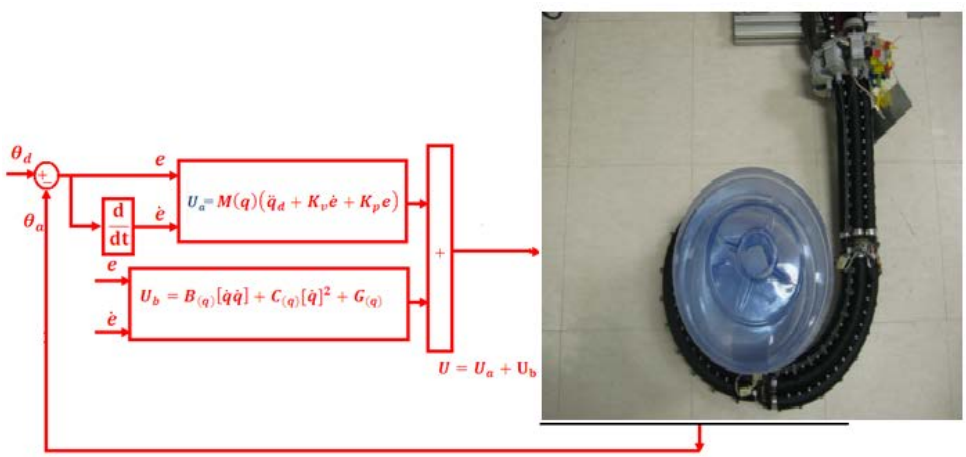

Figure 2. Block Diagram of PD-computed Torque Controller (PD-CTC)

Fuzzy Inference Engine: This section provides a review about foundation of fuzzy logic based on [32- 53]. Supposed that U is the universe of discourse and x is the element of U, therefore, a crisp set can be defined as a set which consists of different elements (x) will all or no membership in a set. A fuzzy set is a set that each element has a membership grade, therefore it can be written by the following definition;

$$\boldsymbol{A = \{x, \mu_A(x) | x \in X\}; A \in U} \quad \textbf{(15)}$$

Where an element of universe of discourse is x, μ_A is the membership function (MF) of fuzzy set. The membership function ($\mu_A(x)$) of fuzzy set A must have a value between zero and one. If the membership function $\mu_A(x)$ value equal to zero or one, this set change to a crisp set but if it has a value between zero and one, it is a fuzzy set. Defining membership function for fuzzy sets has divided into two main groups; namely; numerical and functional method, which in numerical method each number has different degrees of membership function and functional method used standard functions in fuzzy sets. The membership function which is often used in practical applications includes triangular form, trapezoidal form, bell-shaped form, and Gaussian form.

Linguistic variable can open a wide area to use of fuzzy logic theory in many applications (*e.g.*, control and system identification). In a natural artificial language all numbers replaced by words or sentences.

$If - then$ Rule statements are used to formulate the condition statements in fuzzy logic. A single fuzzy $If - then$ rule can be written by

$$\boldsymbol{If\ x\ is\ A\ Then\ y\ is\ B} \quad \textbf{(16)}$$

where A and B are the Linguistic values that can be defined by fuzzy set, the $If - part$ of the part of "$x\ is\ A$" is called the antecedent part and the $then - part$ of the part of "$y\ is\ B$" is called the Consequent or Conclusion part. The antecedent of a fuzzy if-then rule can have multiple parts, which the following rules shows the multiple antecedent rules:

$$\boldsymbol{if\ e\ is\ NB\ and\ \dot{e}\ is\ ML\ then\ T\ is\ LL} \quad \textbf{(17)}$$

where e is error, $\dot{e}$ is change of error, NB is Negative Big, ML is Medium Left, T is torque and LL is Large Left. $If - then$ rules have three parts, namely, fuzzify inputs, apply fuzzy operator and apply implication method which in fuzzify inputs the fuzzy statements in the antecedent replaced by the degree of membership, apply fuzzy operator used when the antecedent has multiple parts and replaced by single number between 0 to 1, this part is a degree of support for the fuzzy rule, and apply implication method used in consequent of fuzzy rule to replaced by the degree of membership. The fuzzy inference engine offers a mechanism for transferring the rule base in fuzzy set which it is divided into two most important methods, namely, Mamdani method and Sugeno method. Mamdani method is one of the common fuzzy inference systems and he designed one of the first fuzzy controllers to control of system engine. Mamdani's fuzzy inference system is divided into four major steps: fuzzification, rule evaluation, aggregation of the rule outputs and defuzzification. Michio Sugeno use a singleton as a membership function of the rule consequent part. The following definition shows the Mamdani and Sugeno fuzzy rule base

$$\begin{array}{llllll} \boldsymbol{Mamdani} & \boldsymbol{F.R^1}: \boldsymbol{if} & \boldsymbol{x\ is\ A\ \ and\ \ y\ is\ B} & \boldsymbol{then} & \boldsymbol{z\ is\ C} \\ \boldsymbol{Sugeno} & \boldsymbol{F.R^1}: \boldsymbol{if} & \boldsymbol{x\ is\ A\ \ and\ \ y\ is\ B} & \boldsymbol{then} & \boldsymbol{f(x,y) is\ C} \end{array} \quad \textbf{(18)}$$

When x and y have crisp values fuzzification calculates the membership degrees for antecedent part. Rule evaluation focuses on fuzzy operation (AND/OR) in the antecedent of the fuzzy rules. The aggregation is used to calculate the output fuzzy set and several

methodologies can be used in fuzzy logic controller aggregation, namely, Max-Min aggregation, Sum-Min aggregation, Max-bounded product, Max-drastic product, Max-bounded sum, Max-algebraic sum and Min-max. Two most common methods that used in fuzzy logic controllers are Max-min aggregation and Sum-min aggregation. Max-min aggregation defined as below

$$\boldsymbol{\mu_U(x_k, y_k, U) = \mu_{\cup_{i=1}^{r} FR^i}(x_k, y_k, U) = \max\left\{\min_{i=1}^{r}\left[\mu_{R_{pq}}(x_k, y_k), \mu_{p_m}(U)\right]\right\}} \quad \textbf{(19)}$$

The Sum-min aggregation defined as below

$$\boldsymbol{\mu_U(x_k, y_k, U) = \mu_{\cup_{i=1}^{r} FR^i}(x_k, y_k, U) = \sum \min_{i=1}^{r}\left[\mu_{R_{pq}}(x_k, y_k), \mu_{p_m}(U)\right]} \quad \textbf{(20)}$$

where r is the number of fuzzy rules activated by x_k and y_k and also $\mu_{\cup_{i=1}^{r} FR^i}(x_k, y_k, U)$ is a fuzzy interpretation of $i - th$ rule. Defuzzification is the last step in the fuzzy inference system which it is used to transform fuzzy set to crisp set. Consequently defuzzification's input is the aggregate output and the defuzzification's output is a crisp number. Centre of gravity method (COG) and Centre of area method (COA) are two most common defuzzification methods, which COG method used the following equation to calculate the defuzzification

$$\boldsymbol{COG(x_k, y_k) = \frac{\sum_i U_i \sum_{j=1}^{r} . \mu_u(x_k, y_k, U_i)}{\sum_i \sum_{j=1}^{r} . \mu_u(x_k, y_k, U_i)}} \quad \textbf{(21)}$$

and COA method used the following equation to calculate the defuzzification

$$\boldsymbol{COA(x_k, y_k) = \frac{\sum_i U_i . \mu_u(x_k, y_k, U_i)}{\sum_i \mu_U . (x_k, y_k, U_i)}} \quad \textbf{(22)}$$

Where $COG(x_k, y_k)$ and $COA(x_k, y_k)$ illustrates the crisp value of defuzzification output, $U_i \in U$ is discrete element of an output of the fuzzy set, $\mu_U . (x_k, y_k, U_i)$ is the fuzzy set membership function, and r is the number of fuzzy rules.

Based on foundation of fuzzy logic methodology; fuzzy logic controller has played important rule to design nonlinear controller for nonlinear and uncertain systems [53-57]. However the application area for fuzzy control is really wide, the basic form for all command types of controllers consists of;

- Input fuzzification (binary-to-fuzzy[B/F]conversion)
- Fuzzy rule base (knowledge base)
- Inference engine
- Output defuzzification (fuzzy-to-binary[F/B]conversion).

3. Methodology

In a typical PID method, the controller corrects the error between the desired input value and the measured value. Since the actual position is the measured signal. The derivative part

of PID methodology is worked based on change of error and the derivative coefficient. In this research the modified PID is used based on boundary derivative part.

$$\dot{e}(t) \triangleq \left(\frac{S}{0.1\,S+1}\right) \times e(t) \tag{23}$$

$$U_{PID} = K_{p_a} e + K_{V_a} \dot{e} + K_I \sum e \tag{24}$$

This is suitable for real-time control applications when powerful processors, which can execute complex algorithms rapidly, are not accessible. The result of modified PID method shows the power of disturbance rejection in this methodology.

Computed torque controller is divided into two main parts: linear part and equivalent part. Equivalent part is based on robot manipulator's dynamic formulation which these formulations are nonlinear; MIMO and some of them are unknown. Equivalent part of CTC is based on nonlinear dynamic formulations of continuum robot manipulator. Robot manipulator's dynamic formulations are highly nonlinear and some of parameters are unknown therefore design a controller based on dynamic formulation is complicated. To solve this challenge fuzzy logic methodology is parallel applied to CTC. In proposed method fuzzy logic method is applied to equivalent part to estimate nonlinear dynamic formulation of continuum robot. In fuzzy error-based computed torque controller; error based Mamdani's fuzzy inference system has considered with one input, one output and totally 7 rules to estimate the dynamic equivalent part. Based on above discussion, the control law for multi degrees of freedom continuum robot manipulator is written as:

$$\tau = \tau_{MPID} + \tau_{CTC} + \tau_{fuzzy} \tag{25}$$

Where, the model-based component τ_{CTC} is the nominal dynamics of systems and to position control of continuum robot manipulator τ_{CTC} can be calculate as follows:

$$\tau_{CTC} = D(q)\left(\ddot{q}_d + K_v \dot{e} + K_p e\right) + [(f + C + G)] \tag{26}$$

and τ_{MPID} is computed as;

$$\tau_{MPID} = K_{p_a} e + K_{V_a}\left(\frac{S}{0.1\,S+1}\right) e(t) + K_I \sum e \tag{27}$$

Based on fuzzy logic methodology

$$f(x) = \tau_{fuzzy} = \sum_{l=1}^{M} \theta^T \zeta(x) \tag{28}$$

where θ^T is adjustable parameter (gain updating factor) and $\zeta(x)$ is defined by;

$$\zeta(x) = \frac{\sum_i \mu(x_i) x_i}{\sum_i \mu(x_i)} \tag{29}$$

The design of error-based fuzzy estimator of equivalent part based on Mamdani's fuzzy inference method has four steps, namely, fuzzification, fuzzy rule base and rule evaluation,

aggregation of the rule output (fuzzy inference system) and defuzzification. **Fuzzification**: the first step in fuzzification is determine inputs and outputs which, it has one input (τ_{MPID}) and one output (τ_{fuzzy}). The second step is chosen an appropriate membership function for input and output which, to simplicity in implementation triangular membership function is selected in this research. The third step chooses the correct labels for each fuzzy set which, in this research namely as linguistic variable. Based on experience knowledge the linguistic variables for input τ_{MPID} are; Negative Big (NB), Negative Medium (NM), Negative Small (NS), Zero (Z), Positive Small (PS), Positive Medium (PM), Positive Big (PB), and based on experience knowledge it is quantized into thirteen levels represented by: -1, -0.83, -0.66, -0.5, -0.33, -0.16, 0, 0.16, 0.33, 0.5, 0.66, 0.83, 1 and the linguistic variables to find the output are; Large Left (LL), Medium Left (ML), Small Left (SL), Zero (Z), Small Right (SR), Medium Right (MR), Large Right (LR) and it is quantized in to thirteen levels represented by: -85, -70.8, -56.7, -42.5, -28.3, -14.2, 0, 14.2, 28.3, 42.5, 56.7, 70.8, 85. **Fuzzy rule base and rule evaluation**: the first step in rule base and evaluation is to provide a least structured method to derive the fuzzy rule base which, expert experience and control engineering knowledge is used because this method is the least structure of the other one and the researcher derivation the fuzzy rule base from the knowledge of system operate and/or the classical controller. Design the rule base of fuzzy inference system can play important role to design the best performance of fuzzy proposed controller, that to calculate the fuzzy rule base the researcher is used to heuristic method which, it is based on the behavior of the control of robot manipulator.

The complete rule base for this controller is shown in Table 1. **Aggregation of the rule output (Fuzzy inference):** Max-Min aggregation is used in this work. **Defuzzification:** The last step to design fuzzy inference in proposed controller is defuzzification. This part is used to transform fuzzy set to crisp set, therefore the input for defuzzification is the aggregate output and the output of it is a crisp number. Center of Gravity method (COG) is used in this research. Gradient Descent Optimization (GDO) is one of the evolutionary optimization algorithms in the branch of non intelligence. Compared to the other evolutionary algorithms, the main excellences of this algorithm are: Simple concept, easy to implement, robustness in tuning parameters, minimum storage space and both global and local exploration capabilities. These birds in a flock are symbolically described as particles. These particles are supposed to a swarm "flying" through the problem space. Each particle has a position and a velocity. Any particle's position in the problem space has one solution for the problem. When a particle transfers from one place to another, a different problem solution is generated. Cost function evaluated the solution in order to provide the fitness value of a particle. "Best location" of each particle which has experienced up to now, is recorded in their memory, in order to determine the best fitness value. Particles of a gradient descent transmit the best location with each other to adapt their own location according to this best location to find the global minimum point. For every generation, the new location is computed by adding the particle's current velocity to its location. GDO is initialized with a random population of solutions in N-dimensional problem space, the $\boldsymbol{i}$ th particle changes and updates its position and velocity according to the following formula:

$$\boldsymbol{V_{id} = w \times (V_{id} + C_1 \times rand_1 * (P_{id} - X_{id}) + C_2 \times rand_2 \times (P_{gd} - X_{id}))} \quad \textbf{(30)}$$

Where $\boldsymbol{X_{id}}$ is calculated by

$$\boldsymbol{X_{id} = X_{id} + V_{id}} \quad \textbf{(31)}$$

Where $\boldsymbol{V_{id}}$ is the inertia weight implies the speed of the particle moving along the dimensions in a problem space. $\boldsymbol{C_1}$ and $\boldsymbol{C_2}$ are acceleration parameters, called the cognitive and social parameters; $\boldsymbol{rand_1}$ and $\boldsymbol{rand_2}$ are functions that create random values in the range of (0, 1). $\boldsymbol{X_{id}}$ is the particle's current location; $\boldsymbol{P_{id}}$ (personal best) is the location of the particle experienced its personal best fitness value; $\boldsymbol{P_{gd}}$ (global best) is the location of the particle experienced the highest best fitness value in entire population; $\boldsymbol{d}$ is the number of dimensions of the problem space; $\boldsymbol{W}$ is the momentum part of the particle or constriction coefficient and it is calculated based on the following equation;

$$\boldsymbol{W = 2/\left(2 - \varphi - \sqrt{\varphi^2 - 4\varphi}\right)} \tag{32}$$

$$\boldsymbol{\varphi = C_1 + C_2} \quad , \quad \boldsymbol{\varphi} > 4 \tag{33}$$

Table 1. Design Rule Base of Fuzzy Inference System

$\boldsymbol{\tau_{MPID}}$	NB	NM	NS	Z	PS	PM	PB
$\boldsymbol{\tau_{Fuzzy}}$	LL	ML	SL	Z	SR	MR	LR

Equation 10 needs each particle to record its location $\boldsymbol{X_{id}}$, its velocity $\boldsymbol{V_{id}}$, its personal best fitness value $\mathbf{P}_{id}$, and the whole population's best fitness value $\boldsymbol{P_{gd}}$.

On the basis of following equation the best fitness value $\boldsymbol{X_i}$ is updated at each generation, where the sign $\boldsymbol{f}$ (.) represents the cost function; $\boldsymbol{X_i}$ (.) indicated the best fitness values; and $\boldsymbol{t}$ denotes the generation step.

$$\boldsymbol{X_i(t+1)} = \begin{cases} \boldsymbol{X_i(t)} & \boldsymbol{f\big(P_d(t+1)\big) \le X_i(t)} \\ \boldsymbol{f\big(P_d(t+1)\big)} & \boldsymbol{f\big(P_d(t+1)\big) > X_i(t)} \end{cases} \tag{34}$$

In GDO, the knowledge of each particle will not be substituted until the particle meets a new position vector with a higher competence value than the currently recorded value in its memory. External disturbances influence on tracking trajectory, error rate and torque which result in chattering. But the values are not such a great values and these oscillations are in all physical systems. So, the sliding mode controller can reject perturbations and external disturbances if these parameters adjust properly. So the methodology which is applied in this paper in order to select the best values for these deterministic coefficients to accomplish high performance control is the Gradient Descent Optimization algorithm. This algorithm tunes the gains and determines the appropriate values for these parameters in harmony with the system which was introduced in rear part. Figure 3 shows the block diagram of proposed methodology.

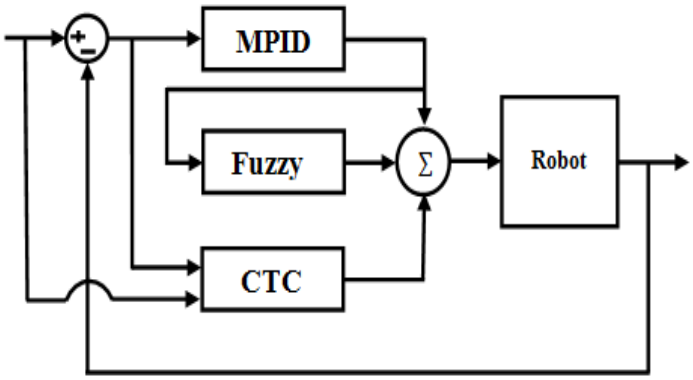

Figure 3. Block Diagram of Proposed Methodology

4. Result and Discussion

Modified PID and proposed method were tested to desired response trajectory. In this research the first, second, and third joints are moved from home to final position without and with external disturbance. The simulation was implemented in MATLAB/SIMULINK environments. It is noted that, these systems are tested by band limited white noise with a predefined 25% of relative to the input signal amplitude which the sample time is equal to 0.1. This type of noise is used to external disturbance in continuous and hybrid systems.

Trajectory Following: Figure 4 shows the tracking performance in MPID and proposed method without disturbance.

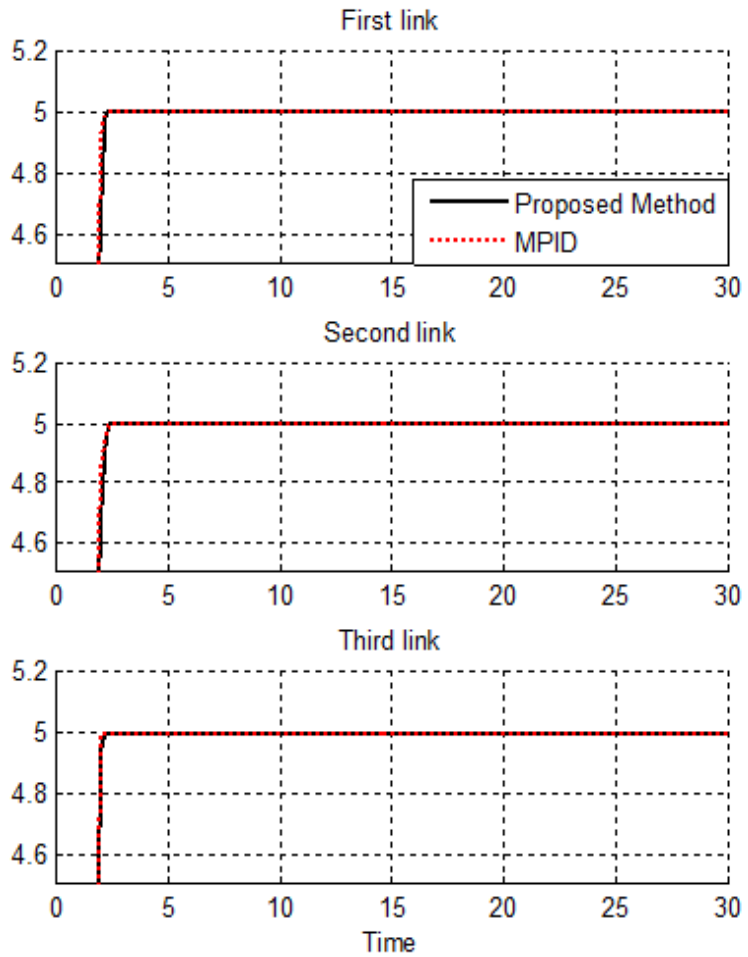

Fig 4: Modified PID and proposed method for First, second and third link trajectory without any disturbance

By comparing step response, Figure 4, in MPID and proposed method, both of controllers have the same responses.

Disturbance rejection: Figure 5 is indicated the power disturbance removal in MPID and proposed method. A band limited white noise with predefined of 25% the power of input signal is applied to both controllers; it found slight oscillations in MPID trajectory responses.

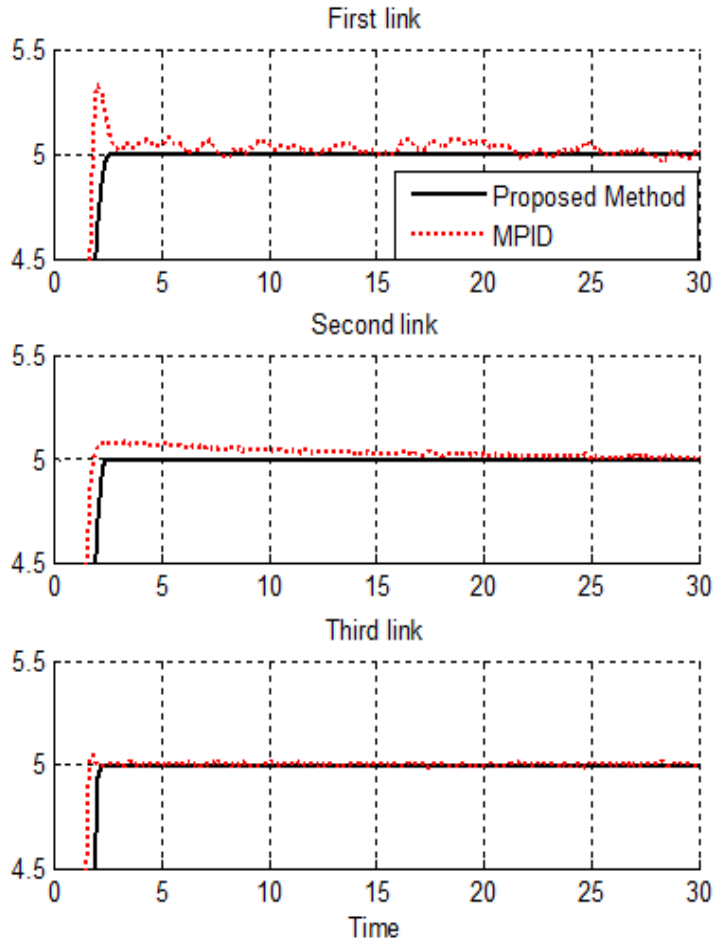

Figure 5. Step Pure SMC and PSO SMC for First, Second and Third Link Trajectory with External Disturbance

Among above graph, relating to step trajectory following with external disturbance, MPID has slightly fluctuation.

5. Conclusion

Refer to this paper, a modified PID parallel fuzzy computed torque controller design and application to flexible robot manipulator has proposed in order to design high performance nonlinear controller in the presence of uncertainties and external disturbance. Regarding to the positive points in computed torque controller, modified PID, fuzzy logic methodology and GDO optimization method the output has improved. Linear modified PID controller can be used to control of partly known nonlinear dynamic parameters of robot manipulator. Pure CTC is used to estimate highly nonlinear parameters, this controller has an important drawback; nonlinear equivalent dynamic formulation in uncertain dynamic parameter. In order to solve the uncertain nonlinear dynamic parameters, implement easily and avoid mathematical model base controller, Mamdani's performance/error-based fuzzy logic methodology with one input and one output and 7 rules is applied to proposed methodology.

The results demonstrate that the proposed method is a partly model-free controller which works well in certain and partly uncertain system.

Acknowledgment

The authors would like to thank the anonymous reviewers for their careful reading of this paper and for their helpful comments. This work was supported by the SSP Research and Development Corporation Program of Iran under grant no. 20132014-Persian Gulf-1A.

References

[1] G. Robinson and J. Davies, "Continuum robots-a state of the art", Proc. IEEE International Conference on Robotics and Automation, Detroit, MI, vol. 4, **(1999)**, pp. 2849-2854.
[2] I. D. Walker, D. Dawson, T. Flash, F. Grasso, R. Hanlon, B. Hochner, W. M. Kier, C. Pagano, C. D. Rahn and Q. Zhang, "Continuum Robot Arms Inspired by Cephalopods, Proceedings SPIE Conference on Unmanned Ground Vehicle Technology VII, Orlando, FL, **(2005)**, pp. 303-314.
[3] K. Suzumori, S. Iikura and H. Tanaka, "Development of Flexible Microactuator and it's Applications to Robotic Mechanisms", Proceedings IEEE International Conference on Robotics and Automation, Sacramento, California, **(1991)**, pp. 1622-1627.
[4] D. Trivedi, C. D. Rahn, W. M. Kier and I. D. Walker, "Soft Robotics: Biological Inspiration, State of the Art, and Future Research", Applied Bionics and Biomechanics, vol. 5, no. 2, **(2008)**, pp. 99-117.
[5] W. McMahan, M. Pritts, V. Chitrakaran, D. Dienno, M. Grissom, B. Jones, M. Csencsits, C. D. Rahn, D. Dawso and I. D. Walker, "Field Trials and Testing of "OCTARM" Continuum Robots", Proc. IEEE International Conference on Robotics and Automation, **(2006)**, pp. 2336-2341.
[6] W. McMahan and I. D. Walker, "Octopus-Inspired Grasp Synergies for Continuum Manipulators", Proc. IEEE International Conference on Robotics and Biomimetics, **(2009)**, pp. 945-950.
[7] I. Boiko, L. Fridman, A. Pisano and E. Usai, "Analysis of chattering in systems with second-order sliding modes", IEEE Transactions on Automatic Control, vol. 52, no. 11, **(2007)**, pp. 2085-2102.
[8] J. Wang, A. Rad and P. Chan, "Indirect adaptive fuzzy sliding mode control: Part I: fuzzy switching", Fuzzy Sets and Systems, vol. 122, no. 1, **(2001)**, pp. 21-30.
[9] J. J. E. Slotine, "Sliding controller design for non-linear systems", International Journal of Control, vol. 40, no. 2, **(1984)**, pp. 421-434.
[10] R. Palm, "Sliding mode fuzzy control", IEEE conference proceeding, **(2002)**, pp. 519-526.
[11] H. Elmali and N. Olgac, "Implementation of sliding mode control with perturbation estimation (SMCPE)", Control Systems Technology, IEEE Transactions, vol. 4, no. 1, **(2002)**, pp. 79-85.
[12] J. Moura and N. Olgac, "A comparative study on simulations vs. experiments of SMCPE", IEEE conference proceeding, **(2002)**, pp. 996-1000.
[13] Y. Li and Q. Xu, "Adaptive Sliding Mode Control With Perturbation Estimation and PID Sliding Surface for Motion Tracking of a Piezo-Driven Micromanipulator", Control Systems Technology, IEEE Transactions, vol. 18, no. 4, **(2010)**, pp. 798-810.
[14] B. Wu, Y. Dong, S. Wu, D. Xu and K. Zhao, "An integral variable structure controller with fuzzy tuning design for electro-hydraulic driving Stewart platform", IEEE conference proceeding, **(2006)**, pp. 5-945.
[15] F. Piltan, N. Sulaiman, Z. Tajpaykar, P. Ferdosali and M. Rashidi, "Design Artificial Nonlinear Robust Controller Based on CTLC and FSMC with Tunable Gain", International Journal of Robotic and Automation, vol. 2, no. 3, **(2011)**, pp. 205-220.
[16] F. Piltan, A. R. Salehi and N. B Sulaiman, "Design artificial robust control of second order system based on adaptive fuzzy gain scheduling", world applied science journal (WASJ), vol. 13, no. 5, **(2011)**, pp. 1085-1092.
[17] F. Piltan, N. Sulaiman, A. Gavahian, S. Soltani and S. Roosta, "Design Mathematical Tunable Gain PID-Like Sliding Mode Fuzzy Controller with Minimum Rule Base", International Journal of Robotic and Automation, vol. 2, no. 3, **(2011)**, pp. 146-156.
[18] F. Piltan, A. Zare, N. B. Sulaiman, M. H. Marhaban and R. Ramli, "A Model Free Robust Sliding Surface Slope Adjustment in Sliding Mode Control for Robot Manipulator", World Applied Science Journal, vol. 12, no. 12, **(2011)**, pp. 2330-2336.
[19] F. Piltan, A. H. Aryanfar, N. B. Sulaiman, M. H. Marhaban and R. Ramli, "Design Adaptive Fuzzy Robust Controllers for Robot Manipulator", World Applied Science Journal, vol. 12, no. 12, **(2011)**, pp. 2317-2329.
[20] F. Piltan, N. Sulaiman, A. Zargari, M. Keshavarz and A. Badri, "Design PID-Like Fuzzy Controller With Minimum Rule Base and Mathematical Proposed On-line Tunable Gain: Applied to Robot Manipulator", International Journal of Artificial intelligence and expert system, vol. 2, no. 4, **(2011)**, pp. 184-195.

[21] F. Piltan, N. Sulaiman, M. H. Marhaban and R. Ramli, "Design On-Line Tunable Gain Artificial Nonlinear Controller", Journal of Advances In Computer Research, vol. 2, no. 4, **(2011)**, pp. 75-83.
[22] F. Piltan, N. Sulaiman, P. Ferdosali and I. Assadi Talooki, "Design Model Free Fuzzy Sliding Mode Control: Applied to Internal Combustion Engine", International Journal of Engineering, vol. 5, no. 4, **(2011)**, pp. 302-312.
[23] F. Piltan, N. Sulaiman, S. Roosta, M. H. Marhaban and R. Ramli, "Design a New Sliding Mode Adaptive Hybrid Fuzzy Controller", Journal of Advanced Science & Engineering Research, vol. 1, no. 1, **(2011)**, pp. 115-123.
[24] F. Piltan, A. Gavahian, N. Sulaiman, M. H. Marhaban and R. Ramli, "Novel Sliding Mode Controller for robot manipulator using FPGA", Journal of Advanced Science & Engineering Research, vol. 1, no. 1, **(2011)**, pp. 1-22.
[25] F. Piltan, N. Sulaiman, A. Jalali and F. Danesh Narouei, "Design of Model Free Adaptive Fuzzy Computed Torque Controller: Applied to Nonlinear Second Order System", International Journal of Robotics and Automation, vol. 2, no. 4, **(2011)**, pp. 232-244.
[26] F. Piltan, N. Sulaiman, I. Asadi Talooki and P. Ferdosali, "Control of IC Engine: Design a Novel MIMO Fuzzy Backstepping Adaptive Based Fuzzy Estimator Variable Structure Control", International Journal of Robotics and Automation, vol. 2, no. 5, **(2011)**, pp. 360-380.
[27] F. Piltan, N. Sulaiman, P. Ferdosali, M. Rashidi and Z. Tajpeikar, "Adaptive MIMO Fuzzy Compensate Fuzzy Sliding Mode Algorithm: Applied to Second Order Nonlinear System", International Journal of Engineering, vol. 5, no. 5, **(2011)**, pp. 380-398.
[28] F. Piltan, N. Sulaiman, H. Nasiri, S. Allahdadi and M. A. Bairami, "Novel Robot Manipulator Adaptive Artificial Control: Design a Novel SISO Adaptive Fuzzy Sliding Algorithm Inverse Dynamic Like Method", International Journal of Engineering, vol. 5, no. 5, **(2011)**, pp. 399-418.
[29] F. Piltan, N. Sulaiman, S. Allahdadi, M. Dialame and A. Zare, "Position Control of Robot Manipulator: Design a Novel SISO Adaptive Sliding Mode Fuzzy PD Fuzzy Sliding Mode Control", International Journal of Artificial intelligence and Expert System, vol. 2, no. 5, **(2011)**, pp. 208-228.
[30] F. Piltan, S. H. Tayebi Haghighi, N. Sulaiman, Iman Nazari and Sobhan Siamak, "Artificial Control of PUMA Robot Manipulator: A-Review of Fuzzy Inference Engine And Application to Classical Controller", International Journal of Robotics and Automation, vol. 2, no. 5, **(2011)**, pp. 401-425.
[31] F. Piltan, N. Sulaiman, A. Zare, S. Allahdadi and M. Dialame, "Design Adaptive Fuzzy Inference Sliding Mode Algorithm: Applied to Robot Arm", International Journal of Robotics and Automation, vol. 2, no. 5, **(2011)**, pp. 283-297.
[32] F. Piltan, A. Jalali, N. Sulaiman, A. Gavahian and S. Siamak, "Novel Artificial Control of Nonlinear Uncertain System: Design a Novel Modified PSO SISO Lyapunov Based Fuzzy Sliding Mode Algorithm", International Journal of Robotics and Automation, vol. 2, no. 5, **(2011)**, pp. 298-316.
[33] F. Piltan, N. Sulaiman, A. Jalali and K. Aslansefat, "Evolutionary Design of Mathematical tunable FPGA Based MIMO Fuzzy Estimator Sliding Mode Based Lyapunov Algorithm: Applied to Robot Manipulator", International Journal of Robotics and Automation, vol. 2, no. 5, **(2011)**, pp. 317-343.
[34] F. Piltan, N. Sulaiman, S. Roosta, A. Gavahian and S. Soltani, "Evolutionary Design of Backstepping Artificial Sliding Mode Based Position Algorithm: Applied to Robot Manipulator", International Journal of Engineering, vol. 5, no. 5, **(2011)**, pp. 419-434.
[35] F. Piltan, N. Sulaiman, S. Soltani, M. H. Marhaban and R. Ramli, "An Adaptive sliding surface slope adjustment in PD Sliding Mode Fuzzy Control for Robot Manipulator", International Journal of Control and Automation, vol. 4, no. 3, **(2011)**, pp. 65-76.
[36] F. Piltan, N. Sulaiman, M. Rashidi, Z. Tajpaikar and P. Ferdosali, "Design and Implementation of Sliding Mode Algorithm: Applied to Robot Manipulator-A Review", International Journal of Robotics and Automation, vol. 2, no. 5, **(2011)**, pp. 265-282.
[37] F. Piltan, N. Sulaiman, A. Jalali, S. Siamak and I. Nazari, "Control of Robot Manipulator: Design a Novel Tuning MIMO Fuzzy Backstepping Adaptive Based Fuzzy Estimator Variable Structure Control", International Journal of Control and Automation, vol. 4, no. 4, **(2011)**, pp. 91-110.
[38] F. Piltan, N. Sulaiman, A. Gavahian, S. Roosta and S. Soltani, "On line Tuning Premise and Consequence FIS: Design Fuzzy Adaptive Fuzzy Sliding Mode Controller Based on Lyaponuv Theory", International Journal of Robotics and Automation, vol. 2, no. 5, **(2011)**, pp. 381-400.
[39] F. Piltan, N. Sulaiman, S. Roosta, A. Gavahian and S. Soltani, "Artificial Chattering Free on-line Fuzzy Sliding Mode Algorithm for Uncertain System: Applied in Robot Manipulator", International Journal of Engineering, vol. 5, no. 5, **(2011)**, pp. 360-379.
[40] F. Piltan, N. Sulaiman and I. AsadiTalooki, "Evolutionary Design on-line Sliding Fuzzy Gain Scheduling Sliding Mode Algorithm: Applied to Internal Combustion Engine", International Journal of Engineering Science and Technology, vol. 3, no. 10, **(2011)**, pp. 7301-7308.

[41] F. Piltan, N. B. Sulaiman, I. Asadi Talooki and P. Ferdosali, "Designing On-Line Tunable Gain Fuzzy Sliding Mode Controller Using Sliding Mode Fuzzy Algorithm: Applied to Internal Combustion Engine", world applied science journal (WASJ), vol. 15, no. 3, **(2011)**, pp. 422-428.
[42] F. Piltan, N. Sulaiman, M. H. Marhaban, A. Nowzary and M. Tohidian,"Design of FPGA based sliding mode controller for robot manipulator", International Journal of Robotic and Automation, vol. 2, no. 3, **(2011)**, pp. 183-204.
[43] I. Eksin, M. Guzelkaya and S. Tokat, "Sliding surface slope adjustment in fuzzy sliding mode controller", Mediterranean Conference, **(2002)**, pp. 160-168.
[44] S. Soltani and F. Piltan, "Design Artificial Nonlinear Controller Based on Computed Torque like Controller with Tunable Gain", World Applied Science Journal, vol. 14, no. 9, **(2011)**, pp. 1306-1312.
[45] F. Piltan, H. Rezaie, B. Boroomand and A. Jahed, "Design robust back stepping online tuning feedback linearization control applied to IC engine", International Journal of Advance Science and Technology, vol. 42, **(2012)**, pp. 183-204.
[46] F. Piltan, I. Nazari, S. Siamak and P. Ferdosali, "Methodology of FPGA-based mathematical error-based tuning sliding mode controller", International Journal of Control and Automation, vol. 5, no. 1, **(2012)**, pp. 89-110.
[47] F. Piltan, M. A. Dialame, A. Zare and A. Badri, "Design Novel Lookup table changed Auto Tuning FSMC: Applied to Robot Manipulator", International Journal of Engineering, vol. 6, no. 1, **(2012)**, pp. 25-40.
[48] F. Piltan, B. Boroomand, A. Jahed and H. Rezaie, "Methodology of Mathematical Error-Based Tuning Sliding Mode Controller", International Journal of Engineering, vol. 6, no. 2, **(2012)**, pp. 96-112.
[49] F. Piltan, F. Aghayari, M. R. Rashidian and M. Shamsodini, "A New Estimate Sliding Mode Fuzzy Controller for Robotic Manipulator", International Journal of Robotics and Automation, vol. 3, no. 1, **(2012)**, pp. 45-58.
[50] F. Piltan, M. Keshavarz, A. Badri and A. Zargari, "Design novel nonlinear controller applied to robot manipulator: design new feedback linearization fuzzy controller with minimum rule base tuning method", International Journal of Robotics and Automation, vol. 3, no. 1, **(2012)**, pp. 1-18.
[51] F. Piltan, "Design sliding mode controller for robot manipulator with artificial tunable gain", Canaidian Journal of pure and applied science, vol. 5, no. 2, **(2011)**, pp. 1573-1579.
[52] F. Piltan, A. Hosainpour, E. Mazlomian, M. Shamsodini and M. H. Yarmahmoudi, "Online Tuning Chattering Free Sliding Mode Fuzzy Control Design: Lyapunov Approach", International Journal of Robotics and Automation, vol. 3, no. 3, **(2012)**, pp. 77-105.
[53] F. Piltan, M. H. Yarmahmoudi, M. Shamsodini, E. Mazlomian and A. Hosainpour, "PUMA-560 Robot Manipulator Position Computed Torque Control Methods Using MATLAB/SIMULINK and Their Integration into Graduate Nonlinear Control and MATLAB Courses", International Journal of Robotics and Automation, vol. 3, no. 3, **(2012)**, pp. 167-191.
[54] F. Piltan, R. Bayat, F. Aghayari and B. Boroomand, "Design Error-Based Linear Model-Free Evaluation Performance Computed Torque Controller", International Journal of Robotics and Automation, vol. 3, no. 3, **(2012)**, pp. 151-166.
[55] F. Piltan, S. Emamzadeh, Z. Hivand, F. Shahriyari and M. Mirazaei, "PUMA-560 Robot Manipulator Position Sliding Mode Control Methods Using MATLAB/SIMULINK and Their Integration into Graduate/Undergraduate Nonlinear Control, Robotics and MATLAB Courses", International Journal of Robotics and Automation, vol. 3, no. 3, **(2012)**, pp. 106-150.
[56] F. Piltan, J. Meigolinedjad, S. Mehrara and S. Rahmdel, "Evaluation Performance of 2nd Order Nonlinear System: Baseline Control Tunable Gain Sliding Mode Methodology", International Journal of Robotics and Automation, vol. 3, no. 3, **(2012)**, pp. 192-211.
[57] F. Piltan, M. Mirzaie, F. Shahriyari, Iman Nazari and S. Emamzadeh, "Design Baseline Computed Torque Controller", International Journal of Engineering, vol. 3, no. 3, **(2012)**, pp. 129-141.

Authors

Mahmoud Moosavi is a researcher in field of Nonlinear Systems such as Continuum Robot in this company. Also, he is an expert of Control and Industrial Automation in Lamerd Cement Company. Other especial area who has survey and practical experience is Power Electronics, Electrical Machinery & Electric Drives (Variable Frequency Converter).

Mehdi Eram is an electrical engineer researcher at research and development company SSP. Co. His research activities deal with the robotics and artificial nonlinear control.

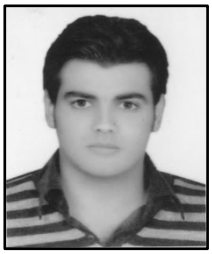

Arzhang Khajeh is an electronic researcher at research and development company SSP. Co. He is an expert in control systems, artificial intelligence and expert systems in this company. His research activities deal with the robotic control, artificial intelligence and expert system.

Omid Mahmoudi is an electrical and control researcher of research and development company SSP. Co. He is now pursuing his Master in control engineering at Shiraz University. His main areas are nonlinear control, artificial control system and robotics.

Farzin Piltan was born on 1975, Shiraz, Iran. In 2004 he is jointed the research and development company, SSP Co, Shiraz, Iran. In addition to 7 textbooks, Farzin Piltan is the main author of more than 80 scientific papers in refereed journals. He is editorial board of international journal of control and automation (IJCA), editorial board of International Journal of Intelligent System and Applications (IJISA), editorial board of IAES international journal of robotics and automation, editorial board of International Journal of Reconfigurable and Embedded Systems and reviewer of (CSC) international journal of robotics and automation. His main areas of research interests are nonlinear control, artificial control system and applied to FPGA, robotics and artificial nonlinear control and IC engine modelling and control.